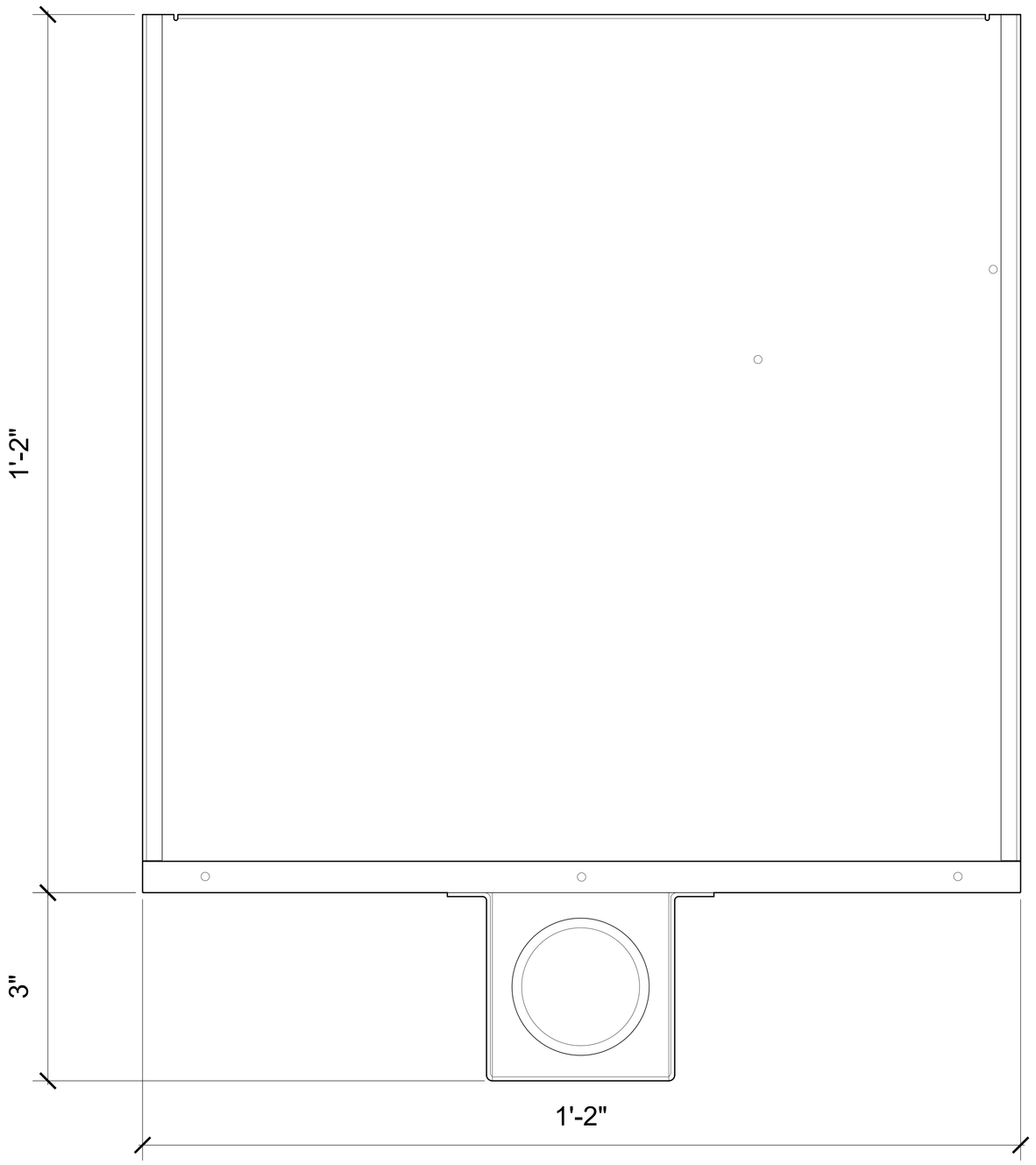

TOP VIEW

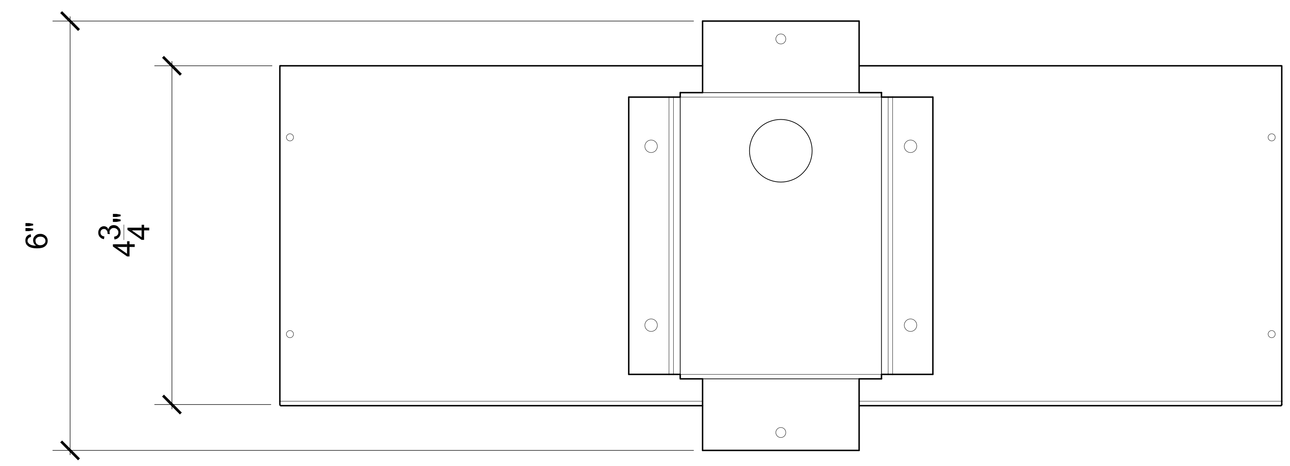

BACK VIEW

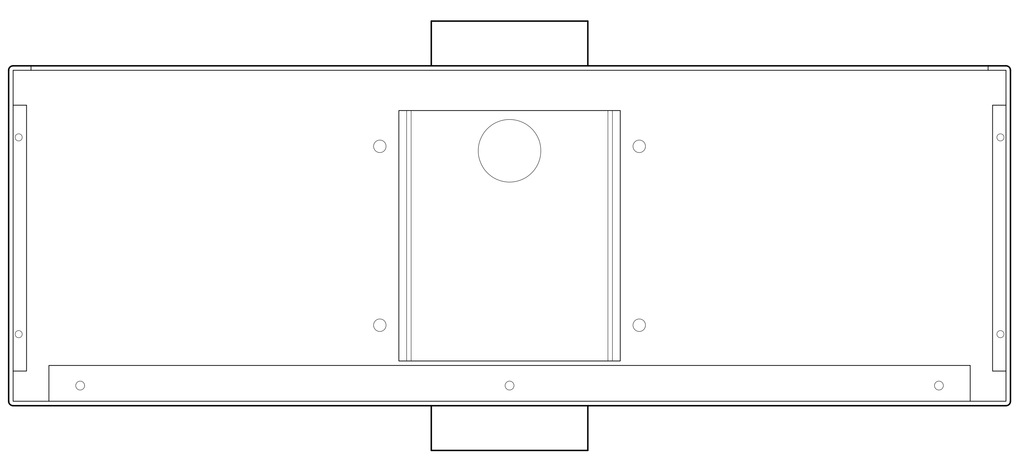

FRONT VIEW

SIDE VIEW

UNLESS OTHERWISE SPECIFIED: DIMENSIONS ARE IN MILLIMETERS SURFACE FINISH: TOLERANCES: LINEAR: ANGULAR:	FINISH		DEBUR AND BREAK SHARP EDGES	DO NOT SCALE DRAWING — REVISION
NAME	SIGNATURE	DATE		TITLE: NB–PEBPM
DRAWN				Plenum Equipment Box Pole Mount Version
CHK'D				
APPV'D				
MFG			MATERIAL:	Nigel B Design Inc. — A0
QA				
			WEIGHT:	SCALE:1:1 — SHEET 1 OF 2

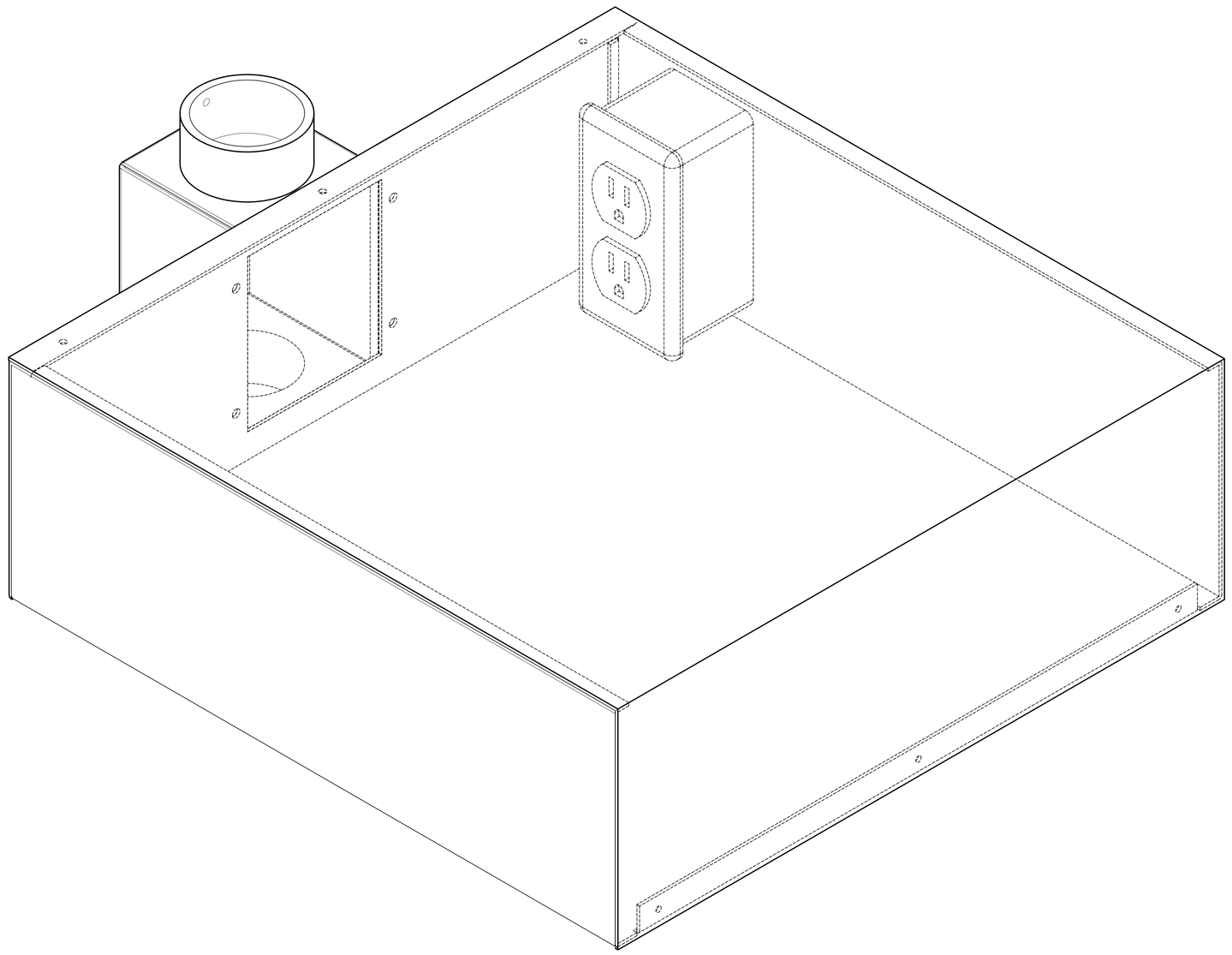

ISOMETRIC VIEW

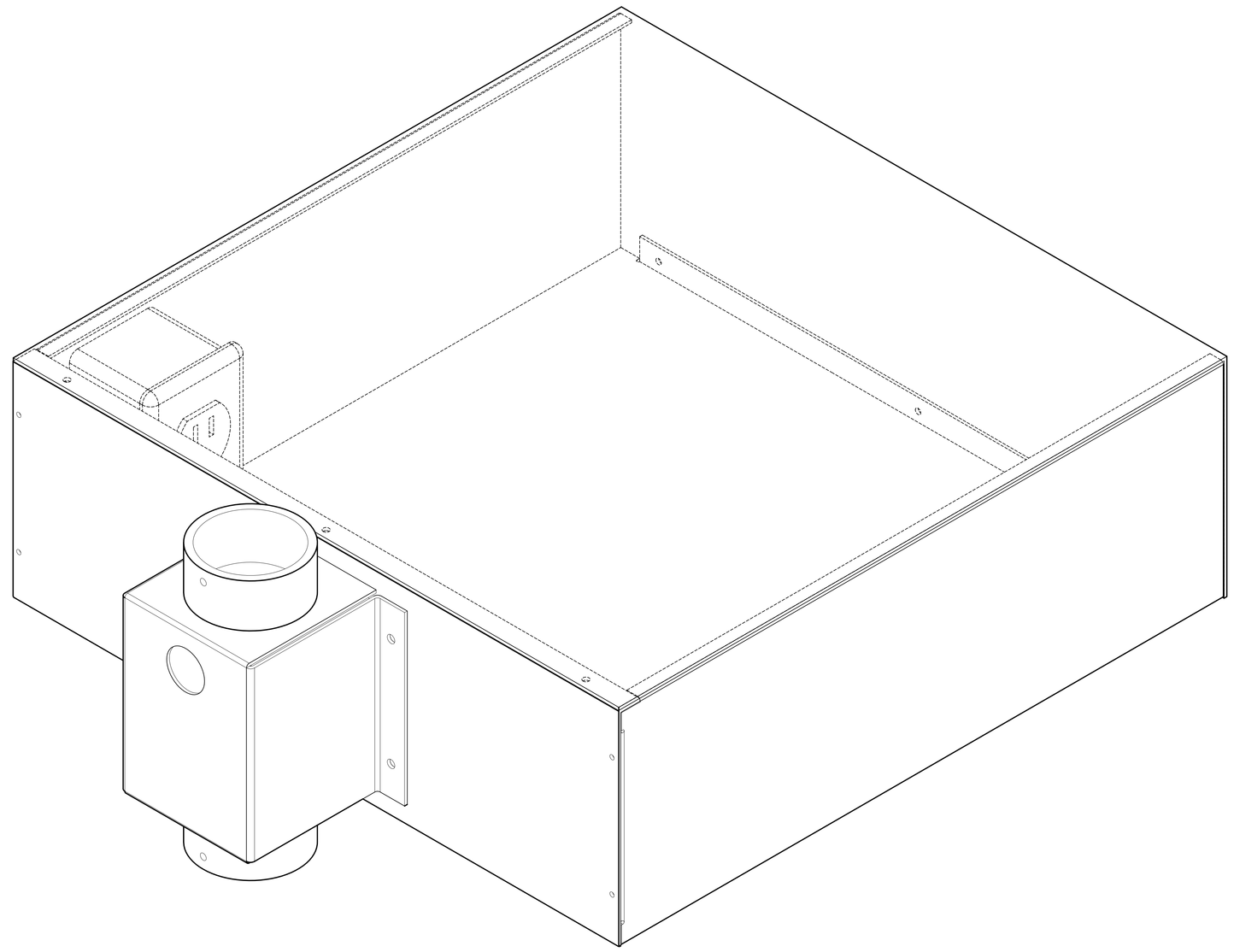

ISOMETRIC VIEW

UNLESS OTHERWISE SPECIFIED: DIMENSIONS ARE IN MILLIMETERS SURFACE FINISH: TOLERANCES: LINEAR ANGULAR	FINISH		DEBUR AND BREAK SHARP EDGES	
	NAME	SIGNATURE	DATE	
DRAWN				
CHK'D				
APPV'D				
MFG				
Q.A			MATERIAL:	
			WEIGHT:	

DO NOT SCALE DRAWING | REVISION

NB-PEBPM

TITLE:

Plenum Equipment Box
Pole Mount Version

Nigel B Design Inc.

A0

SCALE:1:1 | SHEET 1 OF 2